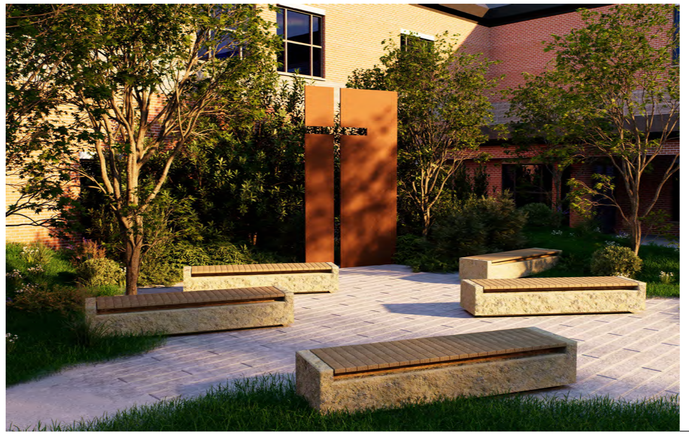

DRAWING INDEX

L 0.00	Cover	1 of 12
L 1.00	Demo	2 of 12
L 1.01	Coverage	3 of 12
L 1.02	Development and Materials	4 of 12
L 1.03	Layout	5 of 12
L 2.00	Grading	6 of 12
L 3.00	Planting	7 of 12
L 3.01	Planting Notes	8 of 12
L 4.00	Irrigation	9 of 12
L 4.01	Irrigation Notes	10 of 12
L 6.00	Details	11 of 12
L 6.01	Details	12 of 12
S 1.0	Structural	
S 2.0	Structural Notes	

ABBREVIATIONS

B&B	Balled and Burlap
BC	Bottom of Curb Elevation
BLDG Building	
BO	Bottom of
BS	Bottom of Step Elevation
BW	Bottom of Wall Elevation
CA	Caliper
CB	Catch Basin
CJ	Control Joint
COL	Column
CONC	Concrete
CONT	Continuous
DIA	Diameter
DIM	Dimension
DN	Down
DS	Downspout
EJ	Expansion Joint
ELEC	Electric
ELEV	Elevation
EQ	Equal
EXT	Existing
FFE	Finish Floor Elevation
FG	Finish Grade Elevation
GA	Gauge
GALV	Galvanized
GFI	Ground Fault Interrupter
HB	Hose Bib
HC	Handicapped
HP	High Point Elevation
HT	Height
ID	Interior Diameter
LP	Low Point Elevation
MIN	Minimum
MTL	Metal
NA	Not Applicable
NTS	Not to Scale
OC	On Center
OD	Outer Diameter
OCEW	On Center Each Way
OH	Overhead
PL	Property Line
REF	Reference
REQ	Required
SCH	Schedule
SF	Square Feet
SIM	Similar
SL	Slope
SS	Stainless Steel
STL	Steel
TBD	To Be Determined
TO	Top of
TOC	Top of Curb Elevation
TS	Top of Step Elevation
TYP	Typical
VIF	Verify In Field
WP	Waterproofing

DRAWING SYMBOLS

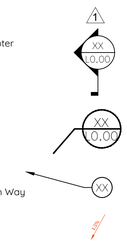

Revision Number

Section Number
Sheet Number

Detail Number
Sheet Number

Material Callout

Slope Indicator

VICINITY MAP : NTS

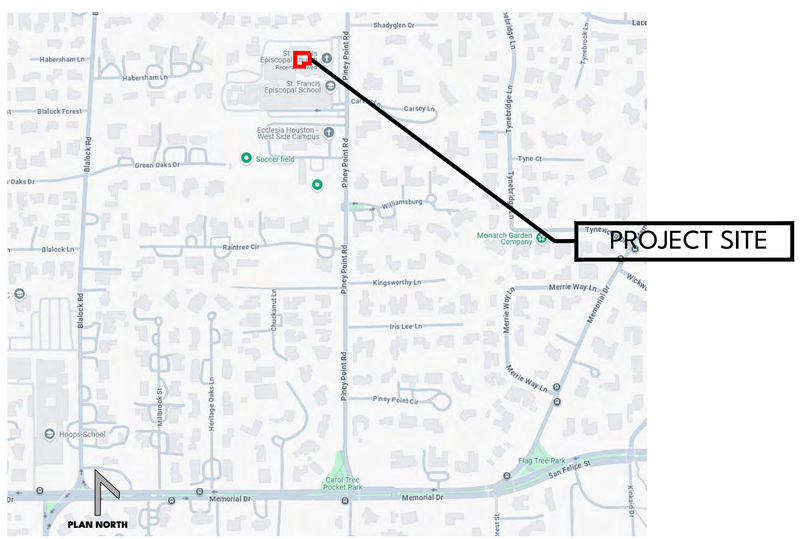

CODE SUMMARY

1. 2021 International Residential Code (with Houston Amendments)
2. 2021 International Building Code (with Houston Amendments)
3. 2022 Minimum Design Loads & Associated Criteria for Buildings and Other Structures (ASCE-7)
4. 2021 International Fire Code (with Houston Amendments)
5. 2021 International Existing Building Code (with Houston Amendments)
6. 2021 Uniform Mechanical Code (with Houston Amendments)
7. 2021 Uniform Plumbing Code (with Houston Amendments)
8. 2021 Swimming Pool and Spa Code (with Houston Amendments)
9. 2023 National Electrical Code (State Mandated)
10. Sign Code (Chapter 46 of the Houston Building Code)
11. 2021 International Energy Conservation Code (with Houston Amendments)
12. ASHRAE 90.1-2019 (with Houston Amendments)
13. 2021 Code Words

AREA CALCULATIONS

See L1.01 for calculations of coverage

PROJECT DATA

PROJECT DESCRIPTION:	14.516 Acres of Land John D. Taylor Survey, Abstract 72
JURISDICTION:	CITY OF PINEY POINT, COUNTY OF HARRIS, STATE OF TEXAS
ZONING:	See Survey
FRONT SETBACK:	
SIDE YARD SETBACK:	
REAR YARD SETBACK:	
ACCESSORY SETBACK:	
SITE ACERAGE:	14.516

PROJECT TEAM

OWNER
St. Francis Episcopal Church

345 Piney Point
Houston, TX 77024
email
Phone

LANDSCAPE ARCHITECT
Outdoor Practice
Jonathan Williams, RLA 2947
9212 Fry Rd, Ste 105-118
Cypress, TX 77433
713.521.5833
hello@odp.la
odp.la

ENGINEER
DaRam
Jorge Vergara
11000 Richmond Ave #300
Houston, TX 77042
713.528.1552
Jorge@daram.com

IRRIGATION
JAMES POLE IRRIGATION
James Pole
100 N Locust St #3
Denton, TX 76201
940.243.2364

GENERAL NOTES

1. All Utilities to be accessible during constriction. Excavation in the vicinity of utilities shall be undertaken with care. The contractor bears full responsibility for this work. The contractor shall verify the location of all site utilities prior to beginning excavation. Damage to utilities that are to remain caused by any contractor, vehicle, equipment, or tool related to the execution of the contract shall be repaired immediately at no expense to the owner.
2. Contract documents consist of drawings and notes, specifications, product manuals, bid forms, and other documentation furnished by the owner/architect.
3. The contractor shall carefully study and compare the construction documents and shall at once report to the owner's representative any error, inconsistency, or omission they may discover. The contractor shall perform no portion of the work at any time without construction documents, or where required, approved shop drawings, product data, or samples for such part of the work.
4. The contractor immediately upon approval of construction pricing, shall prepare and submit for the owner information an estimated progress schedule for the work described in the construction documents. The schedule shall be submitted within (5) days of the approval date.
5. Substitution Procedures - a) Substitution requests shall be submitted during the bidding process, a minimum of one week prior to the bid due date; b) Changes proposed by the contractor that are required due to changed project conditions may be considered during the submittal phase. c) Substitution requests for convenience or for lack of planning will not be accepted.
6. The contractor shall maintain at the site for the owner/architect, one record copy of all drawings, specifications, addenda, change orders, and other modifications in good order and marked currently to record all changes made during construction and approved shop drawings, product data, and samples.
7. Each contractor/ subcontractor shall be responsible for daily clean up and removal of all debris as related to their trade, the site shall be left clean and ready for the next trade. In the final phase, the contractor shall leave the area clean for the owner to move in.
8. Unless otherwise provided in contract documents contractor is to provide and pay for all permits, labor, construction, equipment, machinery, tools transportation, and other facilities and services necessary for proper execution and completion of work.
9. Contractor shall be responsible to the owner for the acts and omissions of the contractor's employees, subcontractors and their agents and employees, and other persons performing any of the work under a contract with the contractor.
10. Contractor shall supervise and direct the work, using the contractor's best skill and attention. The contractor shall be solely responsible for all construction means, methods, techniques, sequences, and procedures, and shall coordinate all portions of the work.
11. Contractor is to obtain all permits required to construct the work and shall comply with federal, state, and local regulations, codes, and ordinances.
12. Contractor to submit any substantial changes or additions to the approved plans to any agencies overseeing the work.
13. Contractor warrants to the owner that all equipment and materials furnished under this contract will be new unless otherwise specified, and all work will be of good quality, free from faults and defects, and in conformance with contract documents. All work not conforming to these requirements, including substitutions not properly approved and authorized, may be considered defective and will be removed and replaced at the contractor's expense.
14. The contractor will be presumed to have inspected and to have read and be thoroughly familiar with the construction documents, failure or omission of any contractor or subcontractor to examine any form, instrument or document shall in no way relieve the contractor from any obligation in respect to their work.
15. All finishes, specified or not, shall be approved by the owner/ architect for suitability prior to application.
16. Where special items require extended lead time preventing installation by the projected completion date, the contractor is to propose an available alternative for approval by the owner/architect.
17. All construction is to be per applicable and governing codes and authorities. The contractor shall notify the owner of any conflict between the drawings and governing codes prior to beginning construction.
18. All plans are drawn to scale as much as possible but are not intended to be and should not be scaled.
19. Base information including the location of property lines, easements, buildings, roads and curbs have been taken from the surveyor drawings. For additional information Refer to the surveyor drawings
20. The owner, without invalidating the contract, may order extra work or make changes by altering, adding to, or deducting from the work, the contract sum being adjusted accordingly, all such work shall be executed under the conditions of the original contract, except that any claim for extensions of time caused thereby shall be adjusted at the time of ordering such change.
21. If the contractor claims that any revision to the drawings involves extra cost under this contract they shall give the owner written notice within a reasonable time after receipt of such instructions. In any event, before proceeding to execute the work, the additional cost shall be approved by the owner in writing.
22. Contractor shall notify owner/architect immediately if they cannot comply with all notes called for on documents and drawings prior to construction
23. Contractor shall furnish and install any and all items required to meet safety codes as required by all applicable federal, state, and local governing ordinances, codes, and regulations.
24. Contractor shall furnish and install all items required to meet accessibility standards as required by all applicable federal, state, and local governing ordinances, codes, and regulations.
25. The contractor shall protect existing improvements from damage. Any damage to existing improvements shall be repaired and/or reconstructed to a condition satisfactory to the owner at the contractor's expense.
26. The contractor shall notify the owner/architect if any information or designs in the contract documents pose concerns with construction, permitting, maintenance, code, and long-term performance prior to commencing work.
27. Reefer to and comply with the geotechnical engineer's contract documents, including the soil report. The soil engineer shall review the site grading, base preparation, excavation, fill, and drainage conditions prior to and during construction.
28. Refer to and comply with the civil engineer's contract documents for grading, drainage, utilities, and soil erosion control. These elements may be shown diagrammatically on the architects' drawings, but the conditions represented on these drawings do not constitute the grading, drainage, and utilities plan.
29. The contractor shall provide adequate drainage away from all structures.
30. Reefer to and comply with the structural engineer's contract documents and recommendations.
31. No Staging or material storage on landscaped areas. The contractor shall coordinate with the owner/ architect to locate a suitable storage area if required.

CLOSE OUT

1. At the completion of the work the contractor shall ensure that all surfaces are clean and unmarked and the area is free of all construction material, debris, and dust.
2. Owner/architect/contractor will conduct a job punch list when construction is substantially complete. Construction is considered to be substantially complete when all items specified, drawn, or detailed in the construction documents have been completed.
3. A copy of all warranties, guarantees, and manufacturers' instructions on equipment furnished and installed by the contractor shall be submitted in pdf form via email to the owner. Close out documents to include:
   a. Certification of substantial completion
   b. Permits and inspections.
   c. Subcontractor directory list
   d. General contractor warranty letter
   e. Subcontractor warranty letters
   f. Operation and warranty information for all materials/products installed by the contractor.
   g. As built irrigation plan

These drawings are property of Outdoor Practice & are for use solely with respect to this project. They are not to be used by the owner, contractor, subcontractors, or suppliers on other projects or for additions to this project. Outdoor Practice shall be deemed the author & retain all common law, statutory, & other reserved rights, in addition to the copyrights. The design shown & described in these drawings & specifications are proprietary & cannot be copied, duplicated, or commercially exploited, in whole or in part without the written authorization of Outdoor Practice.

issue log:

NOT FOR REGULATORY APPROVAL PERMITTING OR CONSTRUCTION

Outdoor practice

hello@odp.la
713. 521. 5833
OutdoorPractice.com

stage: CD

client: St. Francis Church

project: North Courtyard
345 Piney Point Rd
Pine Point, TX

page: 01 of 12

checked by: ---

revision: None

date: 20250611

scale: ---

sheet: Cover

L 0.0

REMOVALS AND PRESERVATION NOTES

1. The contractor shall carefully remove and protect all items identified to remain and to be salvaged.
2. Material resulting from demolition and not scheduled for salvaging or reuse shall become the property of the contractor and shall be removed from the site and legally disposed of. Disposal shall be timely, performed as promptly as possible and not left until the final cleanup.
3. Refer to the signed and sealed existing conditions survey as provided by the surveyor.
4. The contractor shall saw cut all pavement cleanly and in a straight line to the nearest concrete joint or as shown on the drawings for bituminous pavement.
5. The contractor shall legally dispose of all items indicated for removal from the property. Items identified to be removed and salvaged shall be carefully detached or deconstructed to prevent damage and properly stored for the owner and/or for reinstallation. The contractor shall protect all items to remain throughout construction.
6. It is strongly encouraged that the contractor recycles or reuses items when appropriate to keep materials out of landfills.
7. The contractor shall photograph existing conditions before beginning work to document existing conditions.
8. The contractor shall protect all existing trees to remain with sturdy, weatherproof fencing and shall not alter grades below the drip line unless approved by the landscape architect and owner.
9. No materials shall be stored under the drip lines of existing trees.
10. The contractor shall confirm all tree and shrub removals with adjacent land owners, homeowner's associates, and local regulator bodies before removals. Trees and shrubs for removal boarding or on the property lines shall be reviewed and approved by the neighbor in writing before removal.
11. All plant and tree removals marked to include the root ball and all stumps and roots.
12. The contractor shall strip topsoil to a depth of 6 inches or as found on-site in a manner to prevent intermingling with underlying subsoil or other waste materials. Remove subsoil and non-soil materials from topsoil, including clay lumps, gravel, and other objects more than 1.5 inches in diameter, trash, weeds, roots, and other waste materials.
13. Stockpile topsoil away from the edge of excavations without intermixing with subsoil. Grade and shape stockpiles to drain surface water. Cover to prevent windblown dust and erosion by water. Limit the height of topsoil stockpiles to 72" do not stockpile topsoil within protection zones.
14. Coordinate the demolition schedule with the owner. minimize disruptions from sound or construction equipment and personnel to occupied areas.
15. For all existing plumbing-irrigation and drainage items removed, demolish lines back to grade or walls to remain. Cap all lines.
16. The contractor shall verify in the field all dimensions and items to be removed. Promptly notify the landscape architect in writing of any discrepancies.

TREE PROTECTION NOTES

1. All guidelines stated below shall be strictly adhered to and monitored by the contractor and all sub-contractors contracted by the general contractor, owner, and/or other consultants.
2. The contractor shall provide and set tree protection fencing around each tree or group of trees to be retained as noted in these documents to prevent the removal of protected trees, storage of construction materials, placement of debris or fill construction operations, and/or equipment usage within the drip line.
3. Tree drip line is defined as the outer limit of the tree canopy edge at all points around the tree perimeter set at the furthest reach of the tree canopy.
4. Prior to tree clearing, brush removal, mass grading, or any other type of construction operation, the contractor shall clearly tag or mark all trees to be removed and obtain the landscape architect's final approval prior to such tree removal and tree protection fencing operation commences.
5. During construction operations, the contractor shall prohibit clearing, parking, or storage of equipment or materials under the canopy of trees and prevent run-off from noted items into the dripline of trees. The contractor shall not allow the disposal of any waste material such as, but not limited to, paint, oil, solvents, asphalt, concrete, mortar, etc., or allow run-off from noted items onto the dripline of trees.
6. No attachments or wires of any kind, other than those of a protective nature, should be attached or passed through any tree.
7. No fill or storage of fill materials or any excavation operations shall occur within the drip line of a tree to be preserved unless there is a specific approved plan for the use of tree wells or retaining walls. Major changes of grade, six inches or greater, will require additional measures to maintain proper oxygen and water exchange within the roots of trees.
8. Refer to tree protection/removal documents for fencing layout and type and specification of fencing required.
9. Any additional trees required for removal for construction processes, utility installations, etc. That are not noted or referenced on plans shall be noted on a plan (8.5x11) with the reason for removal and submitted to the landscape architect for review and processing with the City.

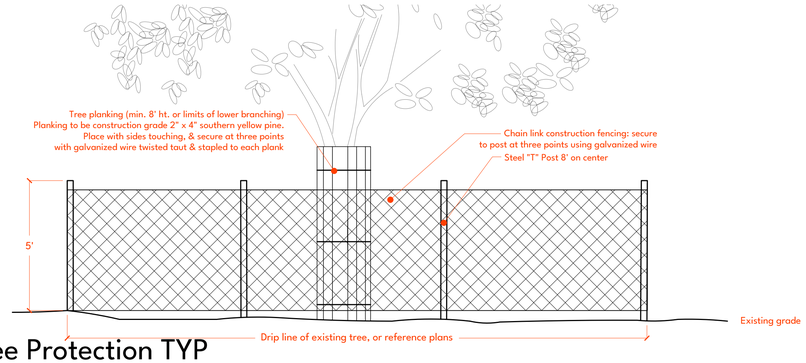

2 Tree Protection TYP

Scale: 3/4"=1'-0"

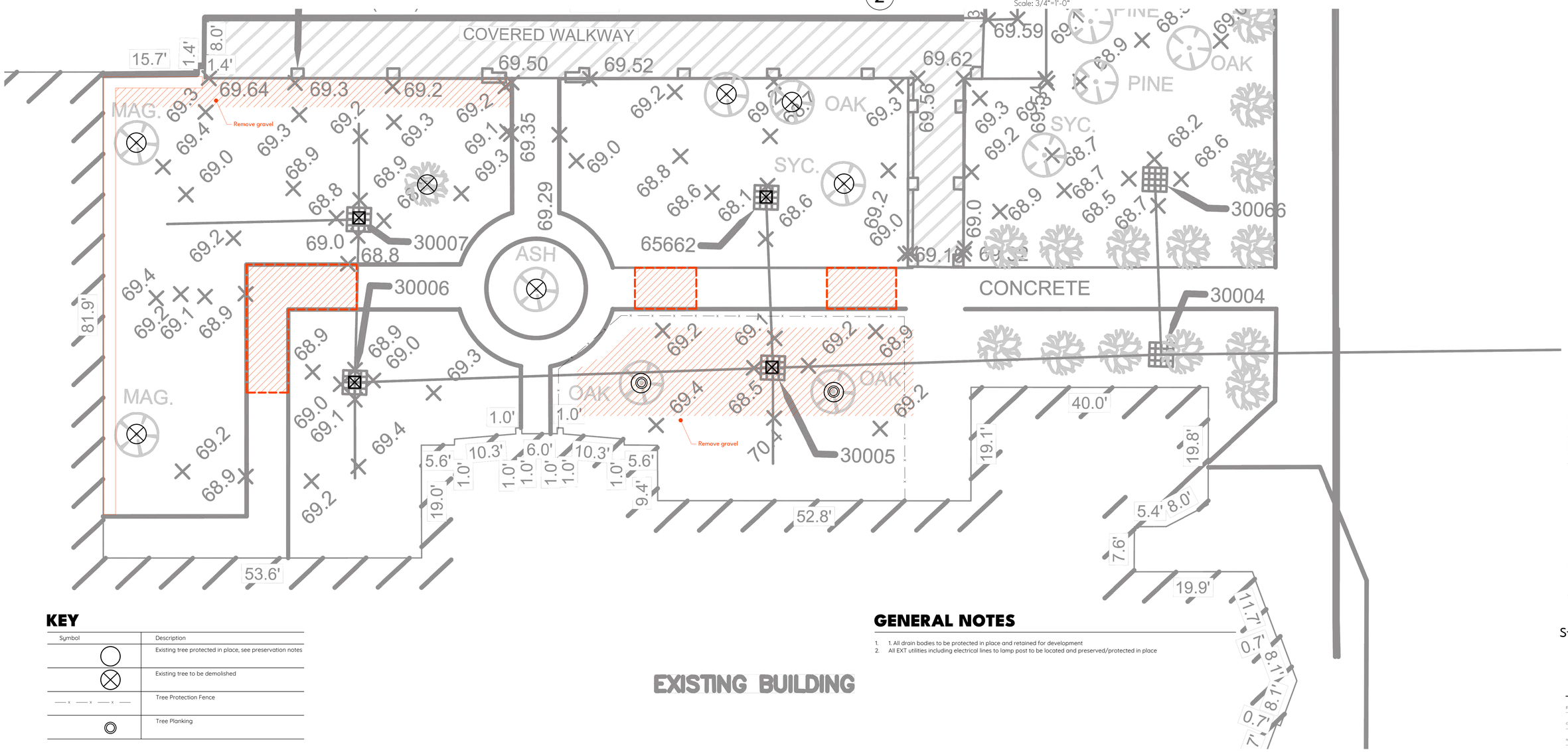

KEY

Symbol	Description
○	Existing tree protected in place, see preservation notes
⊗	Existing tree to be demolished
—— x —— x —— x ——	Tree Protection Fence
◎	Tree Planking

GENERAL NOTES

1. 1. All drain bodies to be protected in place and retained for development
2. All EXT utilities including electrical lines to lamp post to be located and preserved/protected in place

PLAN NORTH

SCALE: 1/8" = 1'-0"

0' 1' 5' 10' 20'

1 Existing Site Plan

Scale: 1/8"=1'-0"

These drawings are property of Outdoor Practice & are for use solely with respect to this project. They are not to be used by the owner, contractor, subcontractors, or suppliers on other projects or for additions to this project. Outdoor Practice shall be deemed the author & retain all common law, statutory, & other reserved rights, in addition to the copyrights. The design shown & described in these drawings & specifications are proprietary & cannot be copied, duplicated, or commercially exploited, in whole or in part without the written authorization of Outdoor Practice.

issue log:

NOT FOR REGULATORY APPROVAL PERMITTING OR CONSTRUCTION

Outdoor practice

hello@odp.la
713. 521. 5833
OutdoorPractice.com

stage: CD

client: St. Francis Church

project: North Courtyard
345 Piney Point Rd
Pine Point, TX

page: 02 of 12

checked by: ---

revision: None

date: 20250611

scale: ---

sheet: Demo

L1.00

NOTES

1. Project reduces the amount of coverage
2. Limit of work to remain within the courtyard
3. Project is not visible from street
4. No alterations to existing drainage or drain patterns are proposed
5. Tree replacements exceed removals and have been discussed with city Forester

COVERAGE

Description	Existing	Proposed	Change
A - Gravel to landscape/lawn	320sf	0sf	-320sf
B - Concrete to paver	240sf	764sf	+524sf
C - Concrete to paver	70sf	170sf	+100sf
D - Concrete to paver	80sf	180sf	+100sf
E - Gravel to landscape	800sf	0sf	-800sf
F - Gravel to remain	160sf	160sf	0sf
G - Addition of gravel	0sf	200sf	+200sf
Total site coverage	**1,670sf**	**1,474sf**	**-196sf**

Note: Coverage of complete campus is 49.XX%, this development **reduces** the amount of coverage

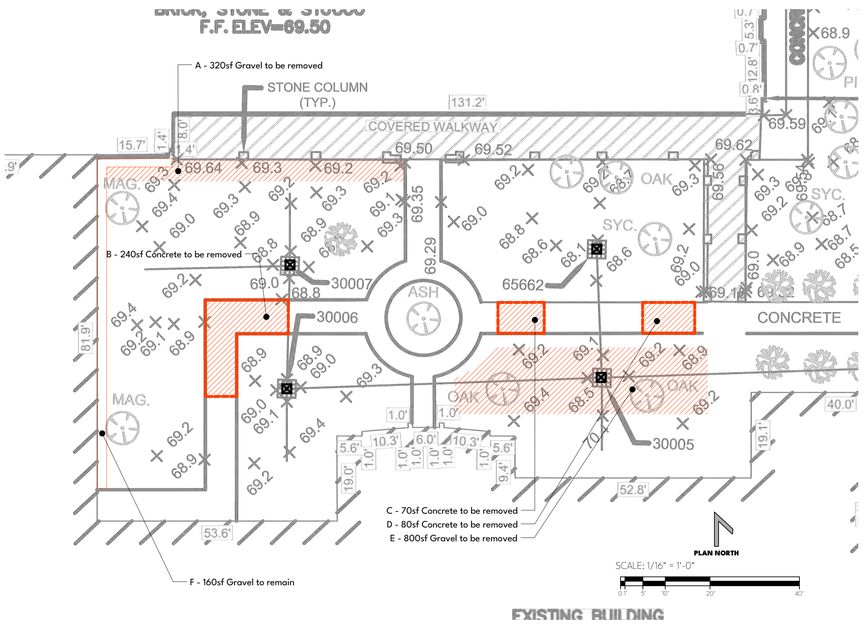

1 Existing Site Plan

Scale: 1/16"=1'-0"

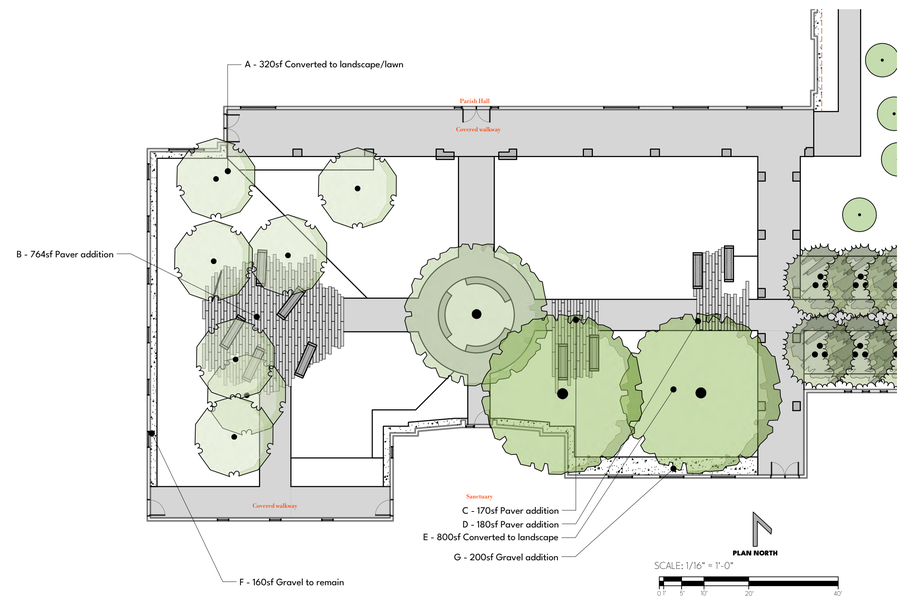

2 Proposed Site Plan

Scale: 1/16"=1'-0"

These drawings are property of Outdoor Practice & are for use solely with respect to this project. They are not to be used by the owner, contractor, subcontractors, or suppliers on other projects or for additions to this project. Outdoor Practice shall be deemed the author & retain all common law, statutory, & other reserved rights, in addition to the copyrights. The design shown & described in these drawings & specifications are proprietary & cannot be copied, duplicated, or commercially exploited, in whole or in part without the written authorization of Outdoor Practice.

issue log:

NOT FOR REGULATORY APPROVAL PERMITTING OR CONSTRUCTION

Outdoor practice

hello@odp.la
713. 521. 5833
OutdoorPractice.com

stage: CD

client: St. Francis Church

project: North Courtyard
345 Piney Point Rd
Pine Point, TX

page: 02 of 12

checked by: ---

revision: None

date: 20250611

scale: ---

sheet: Coverage

L1.01

LEGEND

- Lawn
- Planting Bed
- Concrete/Stone Patio/Pathway
- Gravel
- Limit of Work
- Property Line - See survey
- Steel Edge TYP
- Sleeve, 4" SCH 40pvc, 2 each crossing

NOTES

1. REF original civil engineering plans provided for Perish Hall development.
2. REF to irrigation drawings for additional sleeves and coordination with site utilities

GENERAL NOTES

1. Any grass within the City's right-of-way which is damaged during construction shall be replaced with St. Augustine grass.
2. Any damage to existing roads, driveways, sidewalks or other appurtenances within the City's right-of-way shall be saw-cut, removed and replaced with material at least equal to that which is damaged.
3. All replacements shall be performed to City standards and will require a building permit issued prior to starting work.
4. During the pool construction process, the contractor shall maintain proper drainage to assure that no water flows onto adjacent properties.
5. All accessory structures, decking fire pits and water features are permitted separately.
6. All area calculations include all of the improvements for this project.
7. Temporary Tree Protection must remain up at all times until the completion of the projector unless City Forester approval.
8. If additional trees are to be removed, a revised tree disposition plan is required.
9. All drainage must be installed as per the city approved drainage plans.
10. All drainage must be properly inspected by the city.
11. Any and all revisions to the pool plans must have city approval prior to making any field changes.
12. All pool projects must be maintained at all times.
13. Temporary and permanent drainage is required for the project.
14. A document box is required and a pool permit must be posted at all times.

MATERIAL SCHEDULE

CODE	DESCRIPTION	DETAIL	Material	Notes
05 Metals				
05-01	Steel Edge, REF L6.00		1/4" x 6" Rolled steel	Clean all marking, grind smooth all welds
05-02	Bench Base, REF L6.00		2x4x 1/8" galvanized tube	Field Galvanize cut ends
05-03	Cross, REF L6.01		1" A588 Weathering steel plate	Clean all markings, grind all welds smooth, see engineering

CODE	DESCRIPTION	DETAIL	Material	Contact	Notes
06 Wood, Plastics, and Composites					
06-01	Wood Bench Top, REF L6.00		Carbon Smart Wood	Zac Tolbert - zac@carbonsmartwood.com	Oak

CODE	DESCRIPTION	DETAIL	Manufacturer	Model	Contact
26 Electrical					
26-01	Uplight at Cross, REF L6.01		FX Luminaire	C-UL	Ewing
26-02	Light Post, REF L6.01		Bega	84187 - Graphite - 3000k	Bega North America bega-us.com

CODE	DESCRIPTION	DETAIL	Notes	Contact
Rock				
K-101	Bench Base - Louders, REF L6.00		Custom Bulls Alpine Cut Stone	Jose Garza - Jose@alpinecutstone.com

CODE	DESCRIPTION	DETAIL	CONC THICKNESS	MATERIAL	FINISH	UNIT SIZE	PATTERN	Contact
Paving								
P-304	Pavers, REF L6.00		2.5	CONC	Light Broom	7.5x14	Melville Plank	Belgard
P-307	Gravel, REF L6.00			Silvermist		1/4"-1/2" no fines		Alamo Stone

CODE	DESCRIPTION	DETAIL
Site Furnishings		
S-101	Wayfinding Sign, REF L6.00	

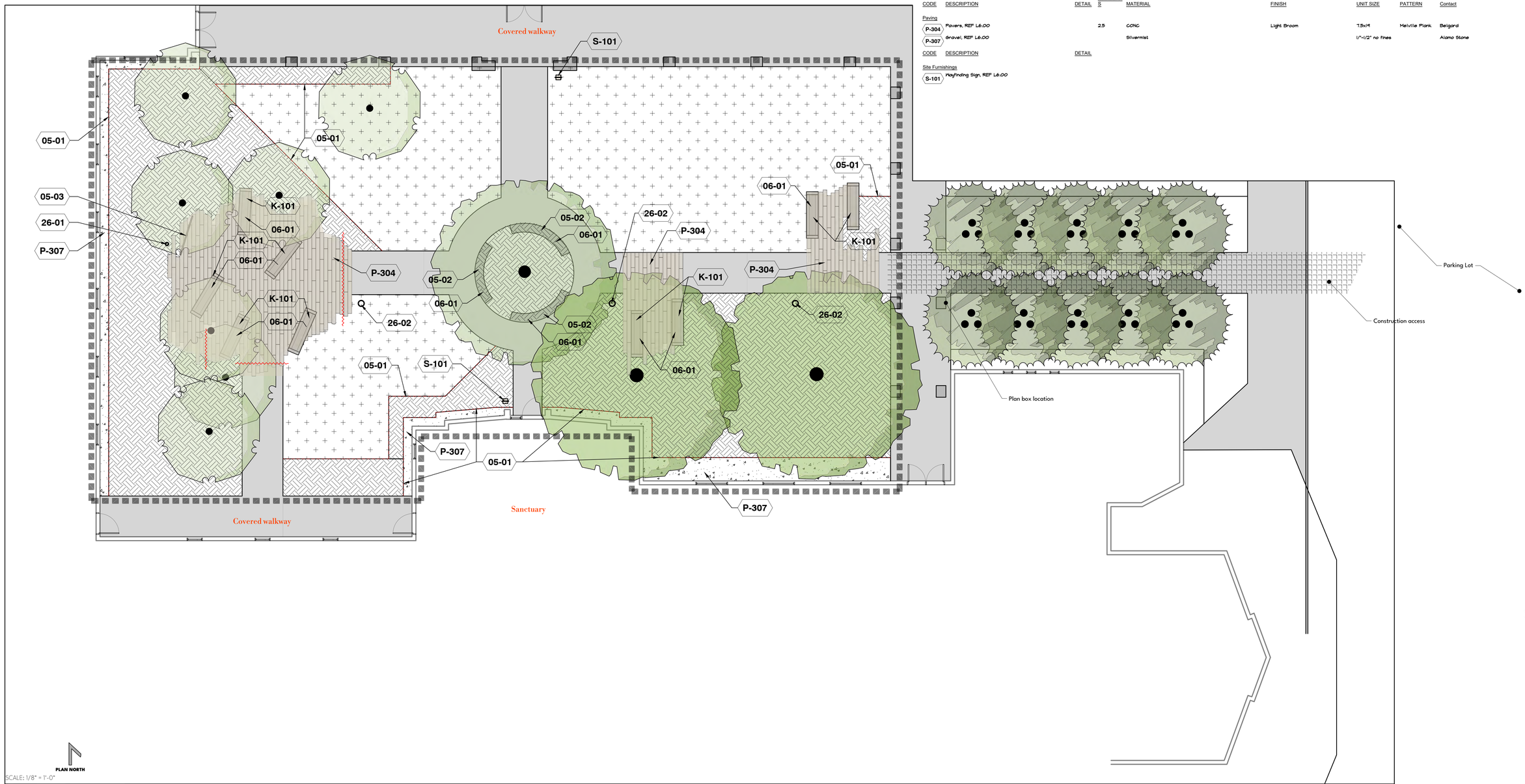

These drawings are property of Outdoor Practice & are for use solely with respect to this project. They are not to be used by the owner, contractor, subcontractors, or suppliers on other projects or for additions to this project. Outdoor Practice shall be deemed the author & retain all common law, statutory, & other reserved rights, in addition to the copyrights. The design shown & described in these drawings & specifications are proprietary & cannot be copied, duplicated, or commercially exploited, in whole or in part without the written authorization of Outdoor Practice.

issue log:

NOT FOR REGULATORY APPROVAL PERMITTING OR CONSTRUCTION

Outdoor practice

hello@odp.la
713. 521. 5833
OutdoorPractice.com

stage: CD

client: St. Francis Church

project: North Courtyard
345 Piney Point Rd
Pine Point, TX

page: 03 of 12

checked by: ---

revision: None

date: 20250611

scale: 1/8" = 1'-0"

sheet: Dev-Materials
L1.02

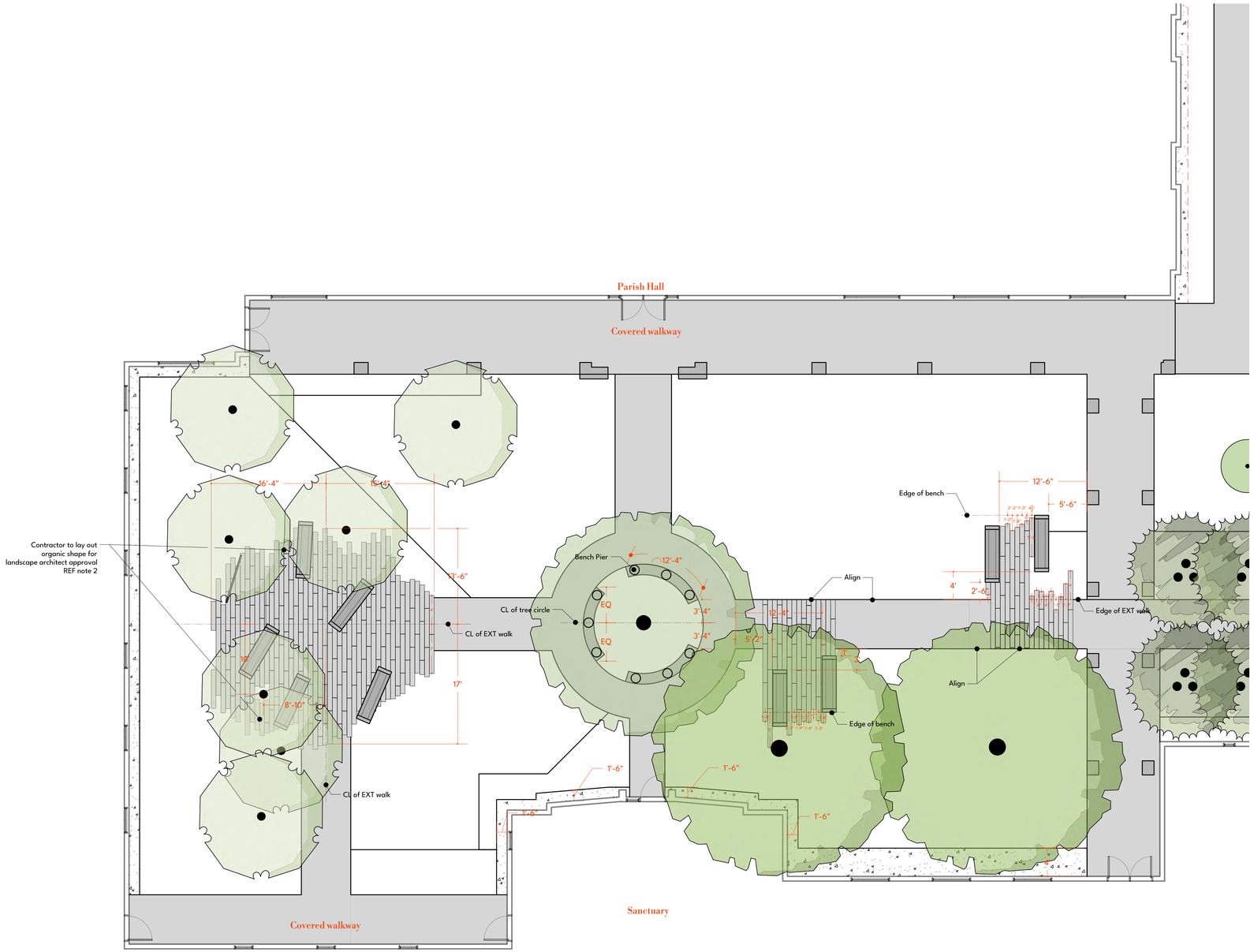

2 Layout

Scale: 1/8"=1'-0"

PLAN NORTH

SCALE: 1/8" = 1'-0"

0 1' 5' 10' 20'

LAYOUT NOTES

1. The contractor shall layout and verify all dimensions prior to construction. Any discrepancies shall be brought to the attention of the landscape architect for direction and resolution of discrepancies prior to proceeding.
2. Paving layouts have a proposed organic layout and are difficult to provide precise dimensions. Contractor will be required to use best practice to layout paving by measuring clear distances and scaling when needed.
3. All layout elevation stakes are to be verified for design intent by the landscape architect before steel installation.
4. For dimensions of the building, parking structure, and other related non-landscape work, refer to the survey, architectural or civil drawings.
5. Verify locations of all site improvements installed under other sections. If any part of this plan cannot be followed due to site conditions, contact the landscape architect for instruction prior to commencing work.
6. Centerlines are located by coordinates and are general locations. The contractor shall stake points and establish a centerline with a temporary stake for final approval by the landscape architect.
7. The contractor shall install all work plumb and true to a line in accordance with the highest trade standards and per manufacturers' recommendations. Angles that appear to be 90 degrees shall be constructed at 90 degrees unless otherwise specified.
8. The contractor shall provide staking and formwork and indicate relationships between adjacent finish grades on site for all pavement and walls for the landscape architect and owner to review and approve prior to construction.
9. Dimensions shall be measured from the back of the curb, edge of the pavement, and finished face of buildings and walls unless otherwise specified.
10. The contractor shall notify the landscape architect immediately if discrepancies are identified or clarifications are needed prior to construction. Discrepancies include but are not limited to dimensional notations versus dimensions scaled from the drawings; drawn quantities versus notation quantities; discrepancies or conflicting information between consultant contract documents. verify non-dimensioned elements on the plan with the landscape architect; do not construct elements by scaling from drawings without verifying dimensions with the landscape architect.
11. Written dimensions take precedence over scaled dimensions.
12. This drawing includes the locations of various utilities. coordinate construction, details, and utility connections with related organizations. Confirm locations with the landscape architect prior to rough-in.
13. Where dimensions are called as "EQ", all referenced items shall be spaced equally, and measured to their center lines or other noted references.
14. Various proposed shapes and layout of design elements are organic and are difficult to provide precise dimensions. Contractor will be required to complete much of the organic layout by scaling and measuring clear distances.

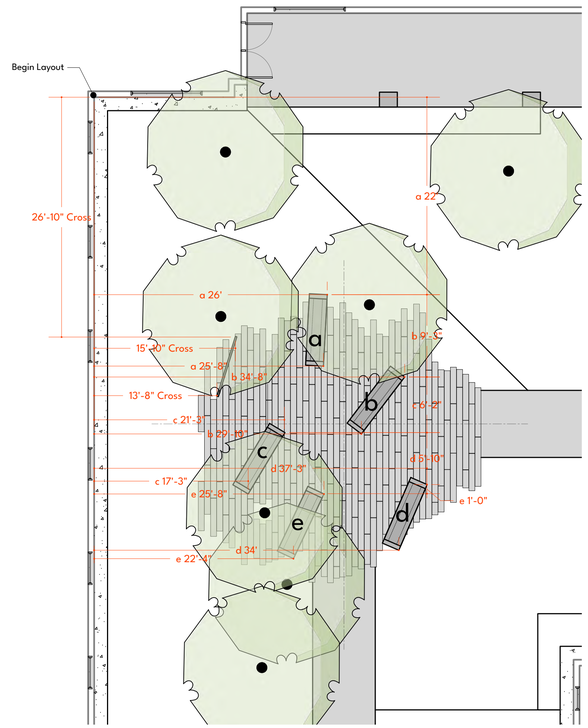

1 Bench & Cross Layout

Scale: 1/8"=1'-0"

PLAN NORTH

SCALE: 1/8" = 1'-0"

0 1' 5' 10' 20'

These drawings are property of Outdoor Practice & are for use solely with respect to this project. They are not to be used by the owner, contractor, subcontractors, or suppliers on other projects or for additions to this project. Outdoor Practice shall be deemed the author & retain all common law, statutory, & other reserved rights, in addition to the copyrights. The design shown & described in these drawings & specifications are proprietary & cannot be copied, duplicated, or commercially exploited, in whole or in part without the written authorization of Outdoor Practice.

issue log:

NOT FOR REGULATORY APPROVAL PERMITTING OR CONSTRUCTION

Outdoor practice

hello@odp.la
713. 521. 5833
OutdoorPractice.com

stage: CD

client: St. Francis Church

project: North Courtyard
345 Piney Point Rd
Pine Point, TX

page: 04 of 12

checked by: ---

revision: None

date: 20250611

scale: 1/8" = 1'-0"

sheet: Layout
L1.03

GRADING NOTES

1. All EXT drainage to remain in place. If any EXT drain elements conflict with what is shown on drawings contractor to immediately bring to the attention of the landscape architect.
2. Pipe locations are shown as diagrammatic. REF original civil engineering plans provided for Perish Hall development.
3. Any existing and/or on-site conditions which vary from those shown on drawings shall be immediately brought to the attention of the landscape architect.
4. All grading shall provide for natural runoff of water without low spots or pockets.
5. The contractor shall be responsible for positive drainage on all areas.
6. The contractor shall ensure that sediment is not tracked onto roads
7. Contractor shall hold soil in planting areas 2 inches below the edge of pavement where needed to accept 2" of mulch unless otherwise specified.
8. The debris created by grading and excavation operations shall become the property of the contractor and shall be legally disposed of away from the job site
9. Temporary storage of debris to be protected from rain events prior to removal.
10. Contractors shall take care in minimizing the disturbance to the existing tree trunks and root systems. all finish grading under the existing trees shall be completed by using hand tools. No large equipment or any equipment with tracks shall be allowed to work or drive under the drip line of the existing trees, except for those areas where paving is to be placed.
11. Hand excavate and hand compact areas under drip lines of existing trees.
12. All excavation within the drip lines of the existing trees shall be radial to the trunk.
13. For existing underground utilities refer to the surveyor plan. The contractor shall be responsible for verifying the actual location and elevation in the field prior to beginning construction. The contractor shall protect all existing utilities and site elements to remain during construction.
14. Refer to the irrigation plan for connections to the existing irrigation system and plumbing.
15. After placement and adjustment of drain bodies to proposed finish grades, contractors shall notify the landscape architect to coordinate and approve final grades in all areas.
16. Grading on pathways to be consistent and transition to existing grades.
17. The contractors shall request a review for inspection of final in place grading a minimum of 48 hours in advance of performing any work. Final grading shall be approved by the landscape architect in the field and prior to surface construction and planting.

KEY

Slope direction

EXT drain to remain

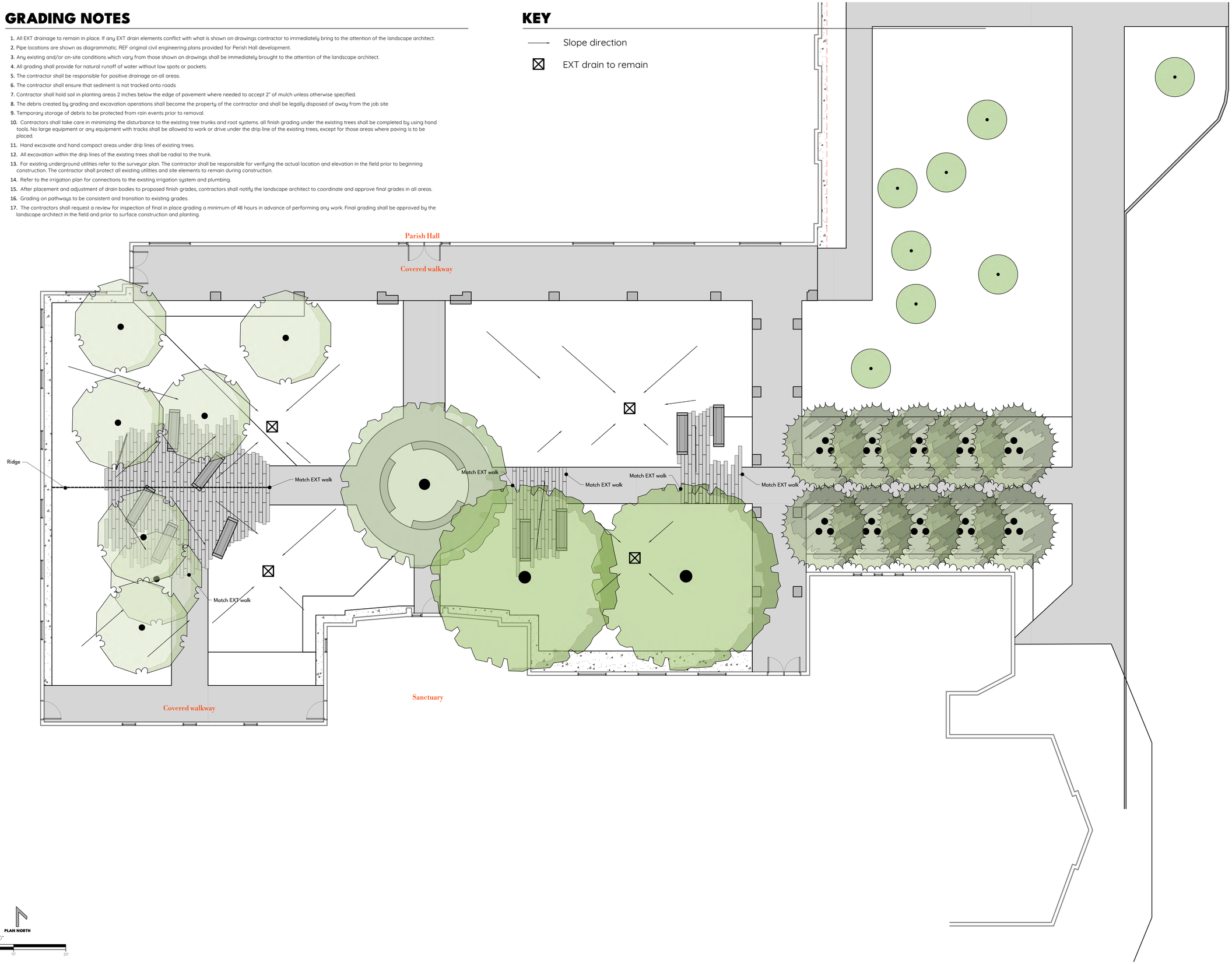

These drawings are property of Outdoor Practice & are for use solely with respect to this project. They are not to be used by the owner, contractor, subcontractors, or suppliers on other projects or for additions to this project. Outdoor Practice shall be deemed the author & retain all common law, statutory, & other reserved rights, in addition to the copyrights. The design shown & described in these drawings & specifications are proprietary & cannot be copied, duplicated, or commercially exploited, in whole or in part without the written authorization of Outdoor Practice.

issue log:

NOT FOR REGULATORY APPROVAL PERMITTING OR CONSTRUCTION

Outdoor practice

hello@odp.la
713. 521. 5833
OutdoorPractice.com

stage: CD

client: St. Francis Church

project: North Courtyard
345 Piney Point Rd
Pine Point, TX

page: 05 of 12

checked by: ---

revision: None

date: 20250611

scale: 1/8" = 1'-0"

sheet: Grading

L2.00

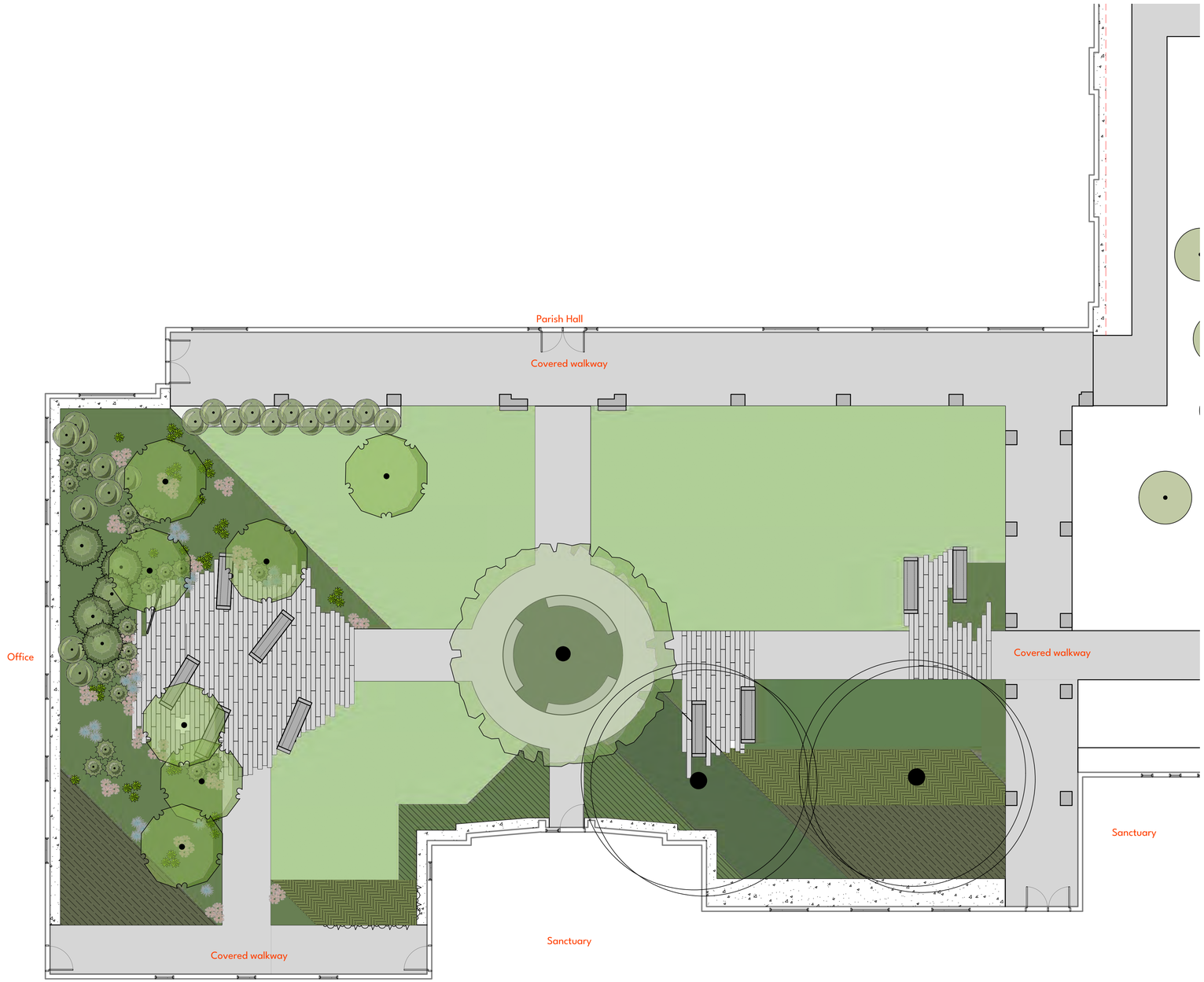

These drawings are property of Outdoor Practice & are for use solely with respect to this project. They are not to be used by the owner, contractor, subcontractors, or suppliers on other projects or for additions to this project. Outdoor Practice shall be deemed the author & retain all common law, statutory, & other reserved rights, in addition to the copyrights. The design shown & described in these drawings & specifications are proprietary & cannot be copied, duplicated, or commercially exploited, in whole or in part without the written authorization of Outdoor Practice.

issue log:

PLANTING SCHEDULE

SYMBOL	BOTANICAL / COMMON NAME	SIZE	CONTAINER	QTY
TREES				
	Ilex x attenuata 'Eagleston' / Holly, 'Eagleston' FTG	45 gal.		5
	Pistacia chinensis / Chinese Pistache	10' Ht.	B&B	7
	Quercus shumardii / Oak, Shumard	100 gal.		1
SHRUBS				
	Agapanthus x 'Ellamae' TM / Agapanthus	3 gal.		20
	Asparagus sprengeri / Fern, Asparagus	1 gal.		38
	Cephalotaxus harringtonia prostrata / Yew, Prostrate	3 gal.		20
	Viburnum anabuki / Viburnum, Walter's	5 gal.		20
	Zephyranthes candida / Zephyrlily	1 gal.	Pot	58

SYMBOL	BOTANICAL / COMMON NAME	SIZE	CONTAINER	SPACING	QTY
SHRUB AREAS					
	Aspidistra elatior / Cast Iron Plant	3 gal.	Pot	24" o.c.	139
	Aspidistra elatior 'Barr01' / Tiny Tank‡ Dwarf Cast Iron Plant	3 gal.	Pot	18" o.c.	181
	Liriope muscari / Liriope	3 gal.		24" o.c.	47
	Polystichum munitum / Fern, Sword	1 gal.		18" o.c.	116
GROUND COVERS					
	Ficus tikoua / Sandy Leaf Fig Ivy	1 gal.		30" o.c.	291
	Trachelospermum asiaticum / Jasmine, Asian	1 gal.		18" o.c.	147
	Zoysia x 'Palisades' / Lawn, Zoysia 'Palisades'	sod			3,337 sf

PLANTING NOTES

1. When plant material is not selected by the landscape architect at the nursery, the contractor shall provide color photographs of representative specimens depicting accurate sizing (with a yardstick or scale) of the actual stock to be procured for each plant species specified on the planting plan. Landscape architect and owner review and approval are required prior to procurement or the material is subject to rejection at the cost of the contractor. Procurement of plant materials by the contractor shall be completed 15 days prior to installation
2. The contractor shall furnish plants that meet the minimum standards provided by the American standard for nursery stock, ANSI Z60.1, for sizing and measurements, proper relationships between height/caliper/width, and appropriate root ball and container sizing.
3. The contractor shall furnish plants true to genus, species, variety, cultivar, stem form, shearing, and other descriptions specified in the contract documents. Provide well-shaped, fully branched, healthy, vigorous stock, densely foliated when in leaf and free from disease, pests, and defects such as knots, sun scald, bald spots, injuries, abrasions, and disfigurement.
4. The contractor shall furnish matching stock uniform in height, spread, habit, and general aesthetics unless otherwise specified in the contract documents. Plants of the same species are to be sourced from a single supplier, to ensure uniformity.
5. The contractor shall notify the landscape architect and owner a minimum 5 days prior to the delivery of plant materials to the site
6. The contractor shall supply all plant quantities as indicated on the planting plan. Notify the landscape architect of any discrepancies in quantities between the plan and the plant lables, in which case the plan shall govern.
7. Trees with damaged, crooked or multiple leaders, crossing trunks, cut limbs and girdling will not be accepted. All trees shall be symmetrical and single-stemmed unless otherwise specified. Trident Maples shall be 3-5 stems.
8. Contractor shall layout all plants in the field for landscape architect approval before planting
9. The contractor shall prune plants only as directed by the landscape architect and never prune terminal buds or leaders.
10. New planting beds are to be dug to a minimum depth of 2x the root ball height, backfill with planting soil mixture. Cowboy Trucking Garden Mix or similar.

NOT FOR REGULATORY APPROVAL PERMITTING OR CONSTRUCTION

Outdoor practice

hello@odp.la
713. 521. 5833
OutdoorPractice.com

stage: CD

client: St. Francis Church

project: North Courtyard
345 Piney Point Rd
Pine Point, TX

page: 06 of 12

checked by: ---

revision: None

date: 20250611

scale: 1/8" = 1'-0"

sheet: Planting
L3.00

PLAN NORTH

SCALE: 1/8" = 1'-0"

0 1 5 10 20'

PREPARATION NOTES

1. Contractor is responsible for grading disturbed areas so that site drains adequately and does not hold water.
2. Contractor is responsible for locating underground utilities and existing irrigation before planting.
3. New planting beds are to be dug to a minimum depth of 2x the root ball height, backfill with planting soil mixture, Cowboy Trucking Bed Mix Soil or SIM
4. Planting areas to be free of rocks and debris over one inch in diameter in size. The total volume of rocks and debris smaller than one inch diameter in size shall not exceed 5%.
5. Sod areas of the site shall be free of dirt clods over one inch in diameter in size.
6. Excess soil from grading is the property of the contractor and should be removed of and disposed off-site.
7. The contractor shall notify the landscape architect, in writing, of all soil or drainage conditions which the contractor considers detrimental to the growth of plants. The contractor shall state the conditions and submit a proposal for correcting the conditions, including any change in cost for the review and acceptance by the owner.

PLANTING NOTES

1. When plant material is not selected by the landscape architect at the nursery, the contractor shall provide color photographs of representative specimens depicting accurate sizing (with a yardstick or scale) of the actual stock to be procured for each plant species specified on the planting plan. Landscape architect and owner review and approval are required prior to procurement or the material is subject to rejection at the cost of the contractor. Procurement of plant materials by the contractor shall be completed 30 days prior to installation
2. The contractor shall furnish plants that meet the minimum standards provided by the American standard for nursery stock, ANSI Z60.1, for sizing and measurements, proper relationships between height/caliper/width, and appropriate root ball and container sizing.
3. The contractor shall furnish plants true to genus, species, variety, cultivars, stem form, shearing, and other descriptions specified in the contract documents. Provide well-shaped, fully branched, healthy, vigorous stock, densely foliated when in leaf and free from disease, pests, and defects such as knots, sun scald, bald spots, injuries, abrasions, and disfigurement.
4. The contractor shall furnish matching stock uniform in height, spread, habit, and general aesthetics unless otherwise specified in the contract documents. Plants of the same species are to be sourced from a single supplier, to ensure uniformity.
5. The contractor shall notify the landscape architect and owner a minimum 5 days prior to the delivery of plant materials to the site
6. The contractor shall supply all plant quantities as indicated on the planting plan. Notify the landscape architect of any discrepancies in quantities between the plan and the plant list, in which case the plan shall govern.
7. Trees with damaged, crooked or multiple leaders, crossing trunks, cut limbs and girdling will not be accepted. All trees shall be symmetrical and single-stemmed unless otherwise specified.
8. Contractor shall layout all plants in the field for owner approval before planting.
9. Triangular spacing of Plant Material when planting large masses, unless otherwise noted.
10. Minor adjustments to tree location may be necessary due to field conditions and final grading. The contractor shall notify the owner if major adjustments are required.
11. The contractor shall prune plants only as directed by the landscape architect and never prune terminal buds or leaders.
12. Sod areas to be rolled with pressure roller to ensure no air pockets below the sod and full contact of clay root bed and soil on site.
13. Sod areas to be treated with BCF HOU-ACTINITE or SIM at manufactures recommended rate after rolling.
17. Planting beds to be treated with MicroLife Multi-Purpose after planting at the manufactures recommended rate before compost application.
18. A rich Humus Compost, Cowboy Trucking or SIM, is to be applied on newly planted areas at a depth of 2", excluding sod areas.

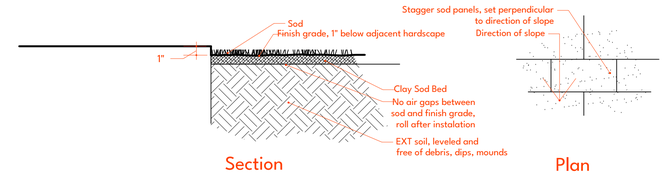

3 Sod Planting TYP

Scale: 11/2"=1'-0"

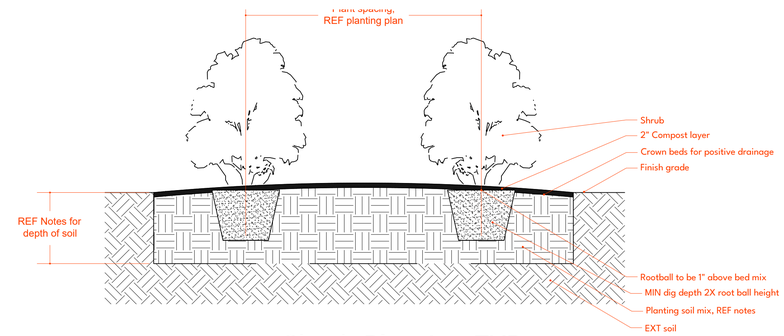

2 Shrub Planting TYP

Scale: 3/4"=1'-0"

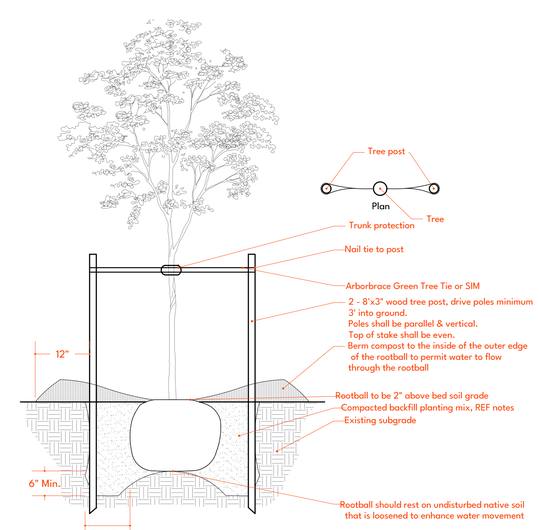

1 Tree Planting TYP

Scale: 3/4"=1'-0"

These drawings are property of Outdoor Practice & are for use solely with respect to this project. They are not to be used by the owner, contractor, subcontractors, or suppliers on other projects or for additions to this project. Outdoor Practice shall be deemed the author & retain all common law, statutory, & other reserved rights, in addition to the copyrights. The design shown & described in these drawings & specifications are proprietary & cannot be copied, duplicated, or commercially exploited, in whole or in part without the written authorization of Outdoor Practice.

issue log:

NOT FOR REGULATORY APPROVAL PERMITTING OR CONSTRUCTION

Outdoor practice

hello@odp.la
713. 521. 5833
OutdoorPractice.com

stage: CD

client: St. Francis Church

project: North Courtyard
345 Piney Point Rd
Pine Point, TX

page: 07 of 12

checked by: ---

revision: None

date: 20250611

scale: ---

sheet: Planting Notes

L3.01

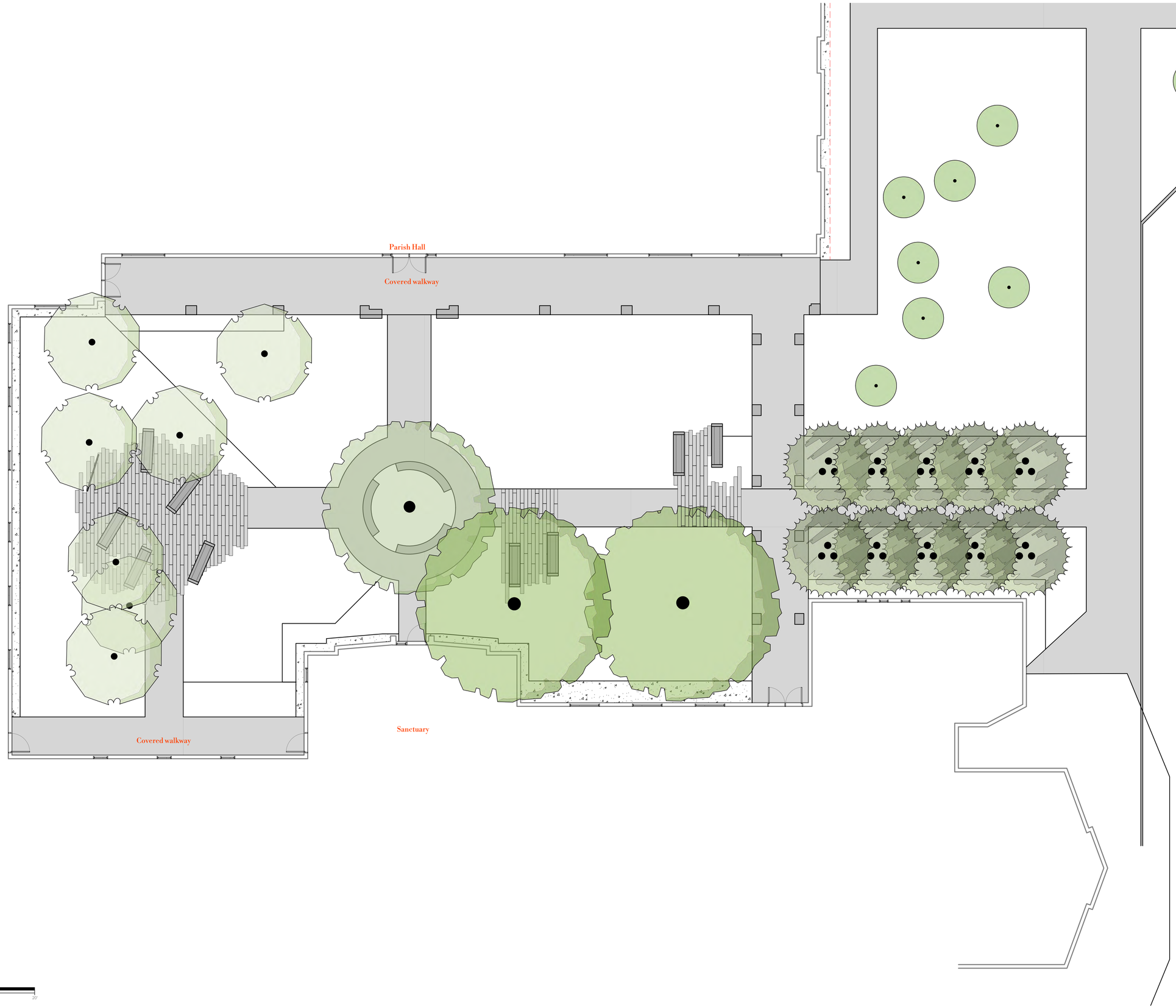

These drawings are property of Outdoor Practice & are for use solely with respect to this project. They are not to be used by the owner, contractor, subcontractors, or suppliers on other projects or for additions to this project. Outdoor Practice shall be deemed the author & retain all common law, statutory, & other reserved rights, in addition to the copyrights. The design shown & described in these drawings & specifications are proprietary & cannot be copied, duplicated, or commercially exploited, in whole or in part without the written authorization of Outdoor Practice.

issue log:

NOT FOR REGULATORY APPROVAL PERMITTING OR CONSTRUCTION

Outdoor practice

hello@odp.la
713. 521. 5833
OutdoorPractice.com

stage: CD

client: St. Francis Church

project: North Courtyard
345 Piney Point Rd
Pine Point, TX

page: 08 of 12

checked by: ---

revision: None

date: 20250611

scale: 1/8" = 1'-0"

sheet: Irrigation

L4.00

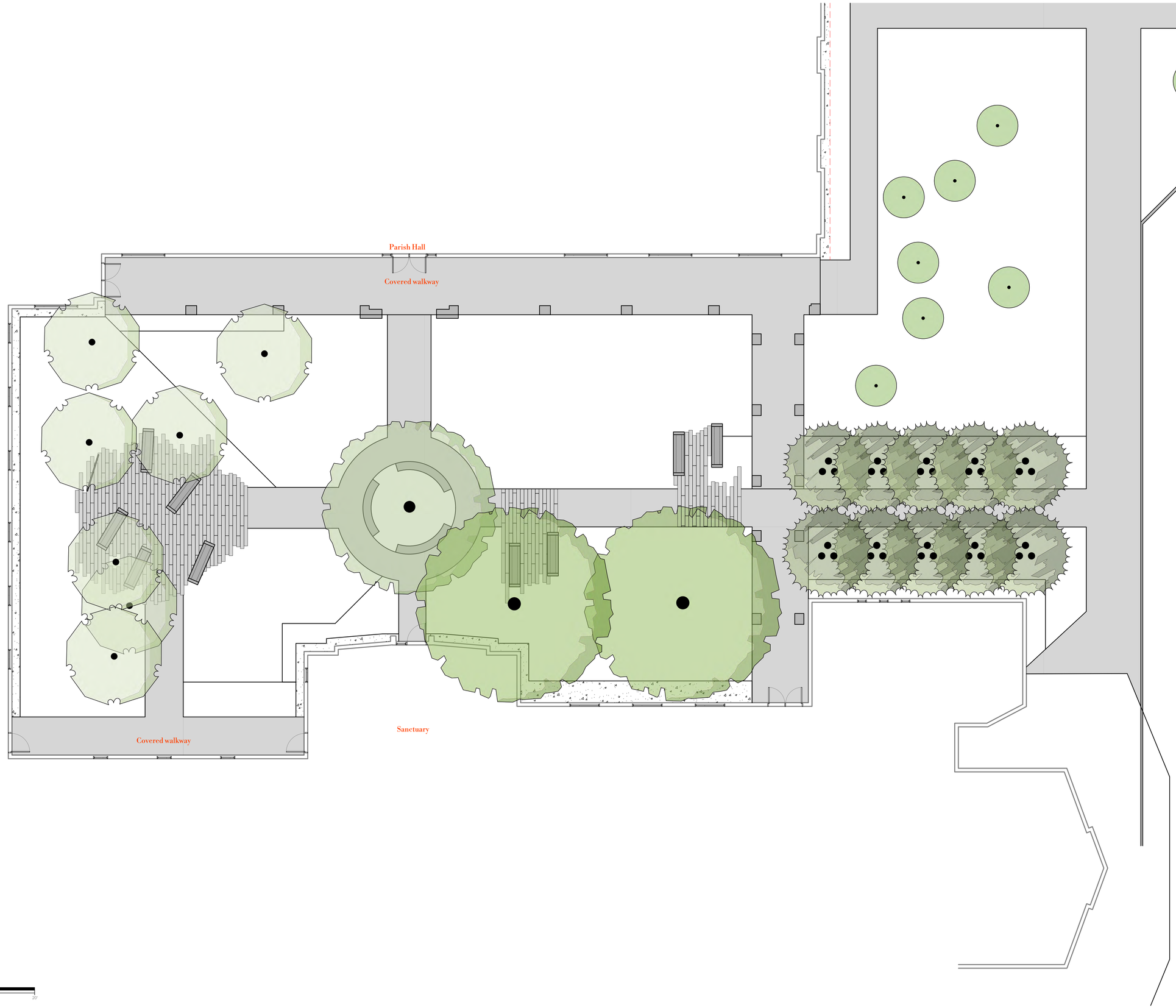

PLAN NORTH

SCALE: 1/8" = 1'-0"

0 1' 5' 10' 20'

These drawings are property of Outdoor Practice & are for use solely with respect to this project. They are not to be used by the owner, contractor, subcontractors, or suppliers on other projects or for additions to this project. Outdoor Practice shall be deemed the author & retain all common law, statutory, & other reserved rights, in addition to the copyrights. The design shown & described in these drawings & specifications are proprietary & cannot be copied, duplicated, or commercially exploited, in whole or in part without the written authorization of Outdoor Practice.

issue log:

NOT FOR REGULATORY APPROVAL PERMITTING OR CONSTRUCTION

Outdoor practice

hello@odp.la
713. 521. 5833
OutdoorPractice.com

stage: CD

client: St. Francis Church

project: North Courtyard
345 Piney Point Rd
Pine Point, TX

page: 09 of 12

checked by: ---

revision: None

date: 20250611

scale: 1/8" = 1'-0"

sheet: Irr. Notes

L4.01

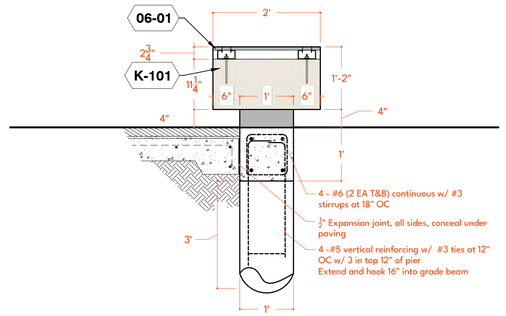

4 Bench Foundation

Scale: 3/4"=1'-0"

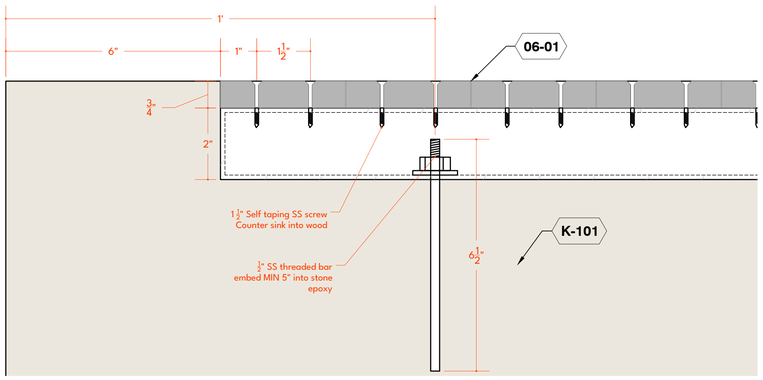

7 Bench Attachment Detail

Scale: 6"=1'-0"

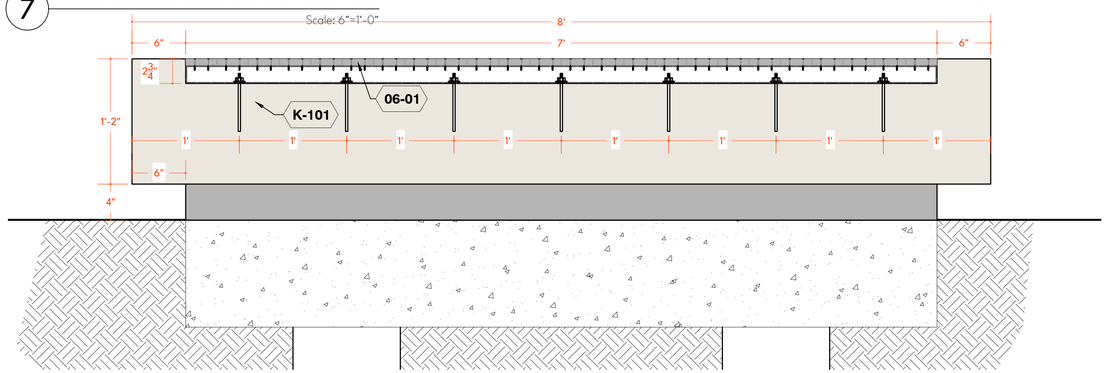

6 Bench Front Elevation

Scale: 1 1/2"=1'-0"

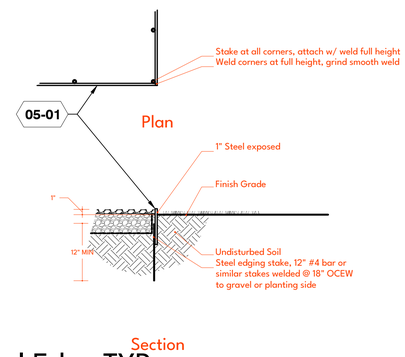

3 Steel Edge TYP

Scale: 1"=1'-0"

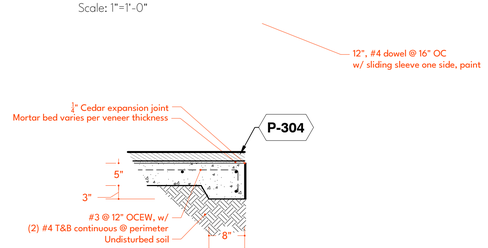

Note: Beam on edge to depth of undisturbed soil where deck is raised above EXT grade

2 Paver TYP

Scale: 3/4"=1'-0"

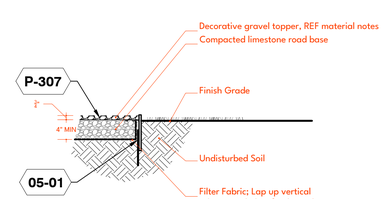

1 Gravel

Scale: 1"=1'-0"

9 Lamp Post

Scale: 1 1/2"=1'-0"

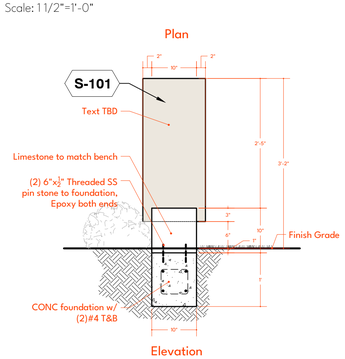

8 Sign Marker

Scale: 1 1/2"=1'-0"

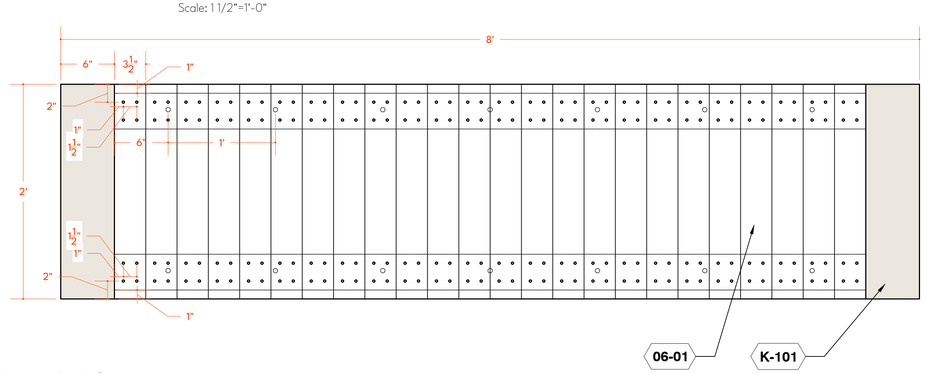

5 Bench Plan

Scale: 1 1/2"=1'-0"

These drawings are property of Outdoor Practice & are for use solely with respect to this project. They are not to be used by the owner, contractor, subcontractors, or suppliers on other projects or for additions to this project. Outdoor Practice shall be deemed the author & retain all common law, statutory, & other reserved rights, in addition to the copyrights. The design shown & described in these drawings & specifications are proprietary & cannot be copied, duplicated, or commercially exploited, in whole or in part without the written authorization of Outdoor Practice.

issue log:

NOT FOR REGULATORY APPROVAL PERMITTING OR CONSTRUCTION

Outdoor practice

hello@odp.la
713. 521. 5833
OutdoorPractice.com

stage: CD

client: St. Francis Church

project: North Courtyard
345 Piney Point Rd
Pine Point, TX

page: 10 of 12

checked by: ---

revision: None

date: 20250611

scale: ---

sheet: Details

L6.00

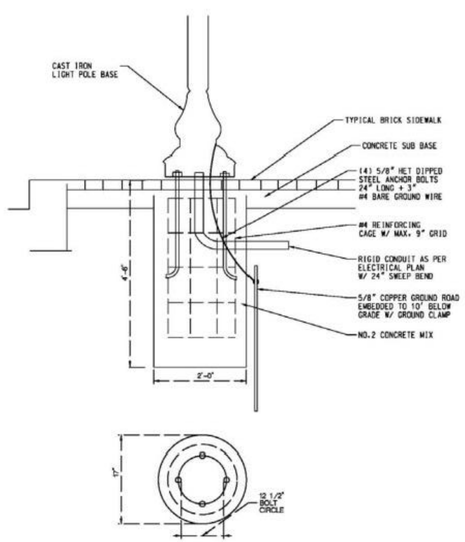

6 Light Post Foundation TYP

Scale: NTS

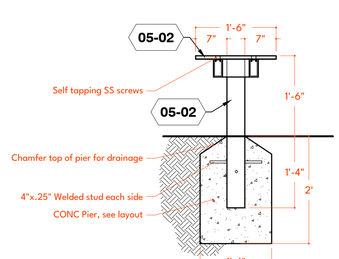

5 Bench At Tree

Scale: 3/4"=1'-0"

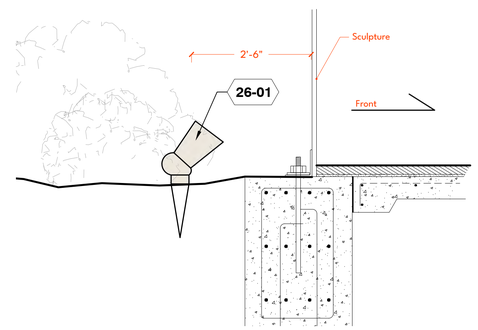

4 Light on Cross

Scale: 11/2"=1'-0"

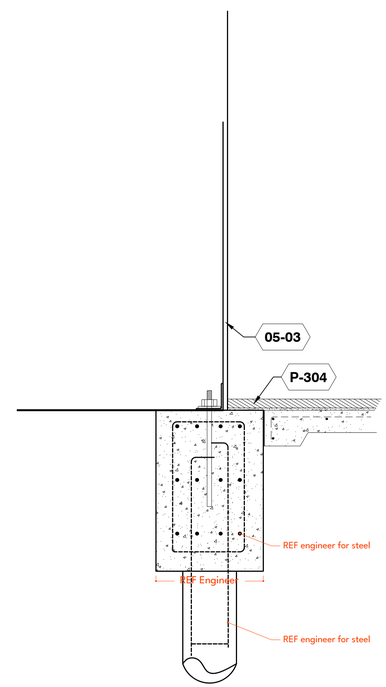

3 Cross Foundation

Scale: 3/4"=1'-0"

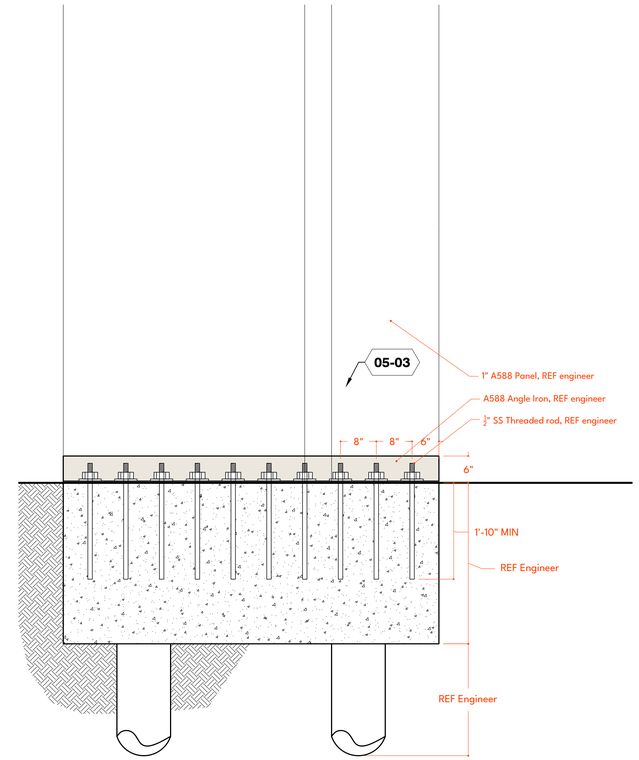

2 Cross Foundation

Scale: 3/4"=1'-0"

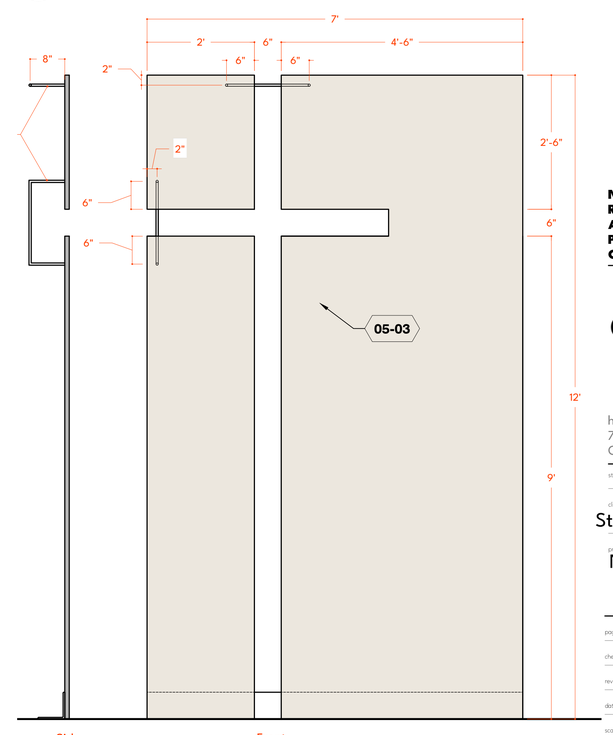

1 Cross Layout

Scale: 3/4"=1'-0"

These drawings are property of Outdoor Practice & are for use solely with respect to this project. They are not to be used by the owner, contractor, subcontractors, or suppliers on other projects or for additions to this project. Outdoor Practice shall be deemed the author & retain all common law, statutory, & other reserved rights, in addition to the copyrights. The design shown & described in these drawings & specifications are proprietary & cannot be copied, duplicated, or commercially exploited, in whole or in part without the written authorization of Outdoor Practice.

issue log:

NOT FOR REGULATORY APPROVAL PERMITTING OR CONSTRUCTION

Outdoor practice

hello@odp.la
713. 521. 5833
OutdoorPractice.com

stage: CD

client: St. Francis Church

project: North Courtyard
345 Piney Point Rd
Pine Point, TX

page: 11 of 12

checked by: ---

revision: None

date: 20250611

scale: ---

sheet: Details
L6.01

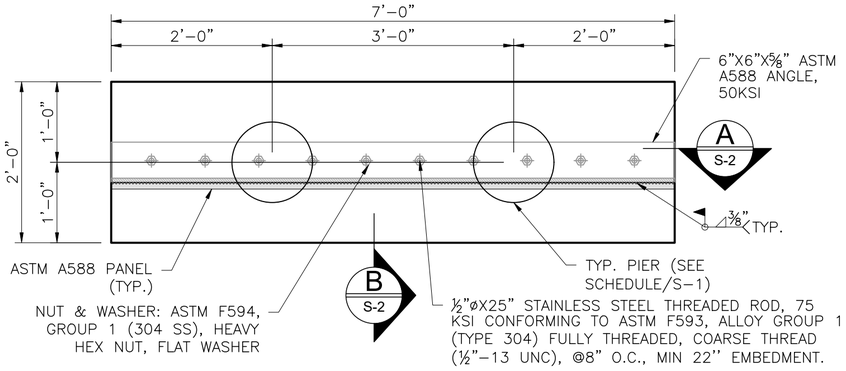

FOUNDATION PLAN

SCALE: ¾" = 1'-0"

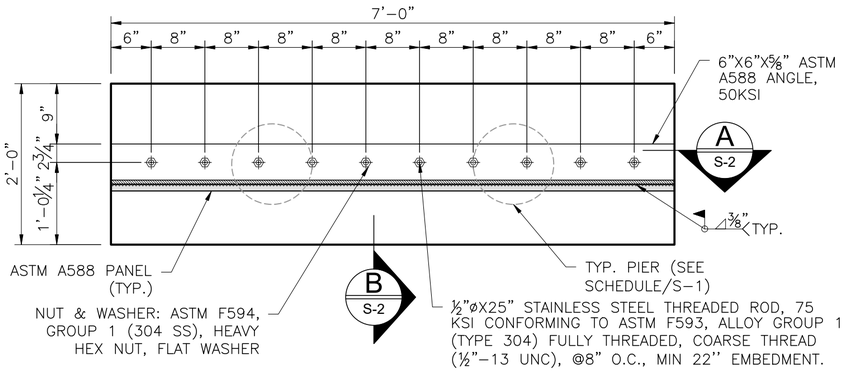

ANCHOR ROD LAYOUT PLAN

SCALE: ¾" = 1'-0"

STRUCTURAL STEEL SPECIFICATIONS

1. STRUCTURAL STAINLESS STEEL THREADED ANCHOR ROD, 75 KSI CONFORMING TO ASTM F593, ALLOY GROUP 1 (TYPE 304) FULLY THREADED, COARSE THREAD (½"-13 UNC).
2. STRUCTURAL STEEL ANGLES SHALL CONFORM TO ASTM A588, 50 KSI. STRUCTURAL STEEL PLATES SHALL CONFORM TO ASTM A588.
3. STRUCTURAL NUTS & WASHERS SHALL CONFORM TO ASTM F594, GROUP 1 (304 SS), HEAVY HEX NUT, FLAT WASHER.
4. DETAILS, FABRICATE, AND ERECT ALL STRUCTURAL STEEL IN CONFORMANCE WITH "CODE OF STANDARD PRACTICE FOR STEEL BUILDINGS AND BRIDGES" OF THE AMERICAN INSTITUTE OF STEEL CONSTRUCTION (AISC), 2000 EDITION.
5. WELDING SHALL CONFORM WITH THE AMERICAN WELDING SOCIETY "STRUCTURAL WELDING CODE" AWS D1. CONSTRUCTION, NINTH EDITION, OF THE AISC.
6. SPLICING OF STRUCTURAL STEEL MEMBERS IS NOT PERMITTED WITHOUT THE PRIOR APPROVAL OF THE ENGINEER OF RECORD.
7. SHOP DRAWINGS SHALL BE COMPLETE FABRICATION AND ERECTIONS DRAWINGS AND SHALL BE SUBMITTED TO THE ENGINEER OF RECORD FOR REVIEW AND APPROVAL PRIOR TO STEEL FABRICATION AND/OR DELIVERY.

STRUCTURAL WELD SPECIFICATIONS

1. WELDING ELECTRODE : USE AWS E308L STAINLESS STEEL ELECTRODES/FILLER RODS FOR WELDING TYPE 304 SS (50 KSI YIELD). WELD PER AWS A5.4 / A5.9. MAINTAIN DRY ELECTRODES, WELD WITH DC+ OR AC POLARITY. FOLLOW PROPER CLEANING AND POST-WELD PASSIVATION.

GENERAL NOTES - CONCRETE

1. VERIFY ALL DIMENSIONS AND ELEVATIONS OF RECESS, LEDGES AND STEPS WITH ARCHITECT BEFORE COMMENCEMENT OF FORM WORK.
2. NO CONCRETE IS TO BE PLACED WITHOUT APPROVAL FROM ENGINEER OR ARCHITECT.
3. CONCRETE SHALL NOT BE PLACED IN FREEZING OR RAINY WEATHER.
4. ALL CONCRETE WORK SHALL BE IN ACCORDANCE WITH ACI318 WITH LATEST REVISIONS.
5. CONCRETE SHALL HAVE MINIMUM 28-DAY COMPRESSIVE STRENGTH OF 3000 PSI.
6. CONCRETE SHALL NOT BE DELIVERED TO JOBSITE WITH SLUMP GREATER THAN 6". WATER SHALL NOT BE ADDED AT THE JOBSITE. CONCRETE PUMP OPERATOR WILL MAKE UP REASONS TO ADD WATER LIKE, "THE WATER FLASHES WHILE PUMPING." THIS IS NOT TRUE. SLUMP TESTS SHOULD BE PERFORMED AT THE JOBSITE BECAUSE THEY WILL ADD WATER EVEN AFTER THEY ARE TOLD NOT TO ADD WATER, AND THE CONCRETE IS OFTEN DELIVERED WITH MUCH HIGHER SLUMP THAN APPROVED/SPECIFIED. WATER DOES NOT NEED TO BE ADDED FOR WORKING THE CONCRETE. THE WORKERS WANT THEIR JOB TO BE EASY AT THE COST OF CONCRETE CRACKS THAT ARE NOT AT ALL NECESSARY IF WATER IS NOT EXCESSIVE.
7. CONCRETE MIX SHALL BE SUBMITTED TO ENGINEER FOR APPROVAL.
8. CURING COMPOUND SHALL BE ADDED IMMEDIATELY WHEN FINISHING IS CONCLUDED. WAITING UNTIL THE ENTIRE POUR OPERATION IS COMPLETED MAY BE TO LONG. APPLYING THE CURING COMPOUND MAY BE APPLIED IN SECTIONS IN ORDER TO APPLY THE CURING COMPOUND IN A TIMELY MANNER.
9. ALL CONCRETE EXPOSED TO WEATHER SHALL BE AIR ENTRAINED.
10. REINFORCING STEEL SHALL BE ASTM A615 GRADE 60 WITH A305 DEFORMATIONS, DETAILED, FABRICATED AND INSTALLED PER ACI "MANUAL OF STANDARD PRACTICE FOR DETAILING REINFORCING CONCRETE", ACI-318 LATEST REVISION.
11. WELDED SMOOTH WIRE FABRIC SHALL CONFORM TO ASTM-A185.
12. REINFORCING STEEL MINIMUM COVERAGE UNLESS NOTED ON REBAR CHAIRS SHALL BE:
    - FOOTINGS 3" BOTTOM, 4" SIDES & 2" TOP
    - GRADE BEAMS 3" FROM EARTH
    - SLAB 3" FROM VAPOR BARRIER
13. CHAMFER ALL EXPOSED EDGES ¾" AT 35 DEGREES.
14. HOLES FOR DRILLED FOOTINGS SHALL BE PLUMB AND FREE OF ALL LOOSE MATERIALS AND WATER. CONCRETE AND REINFORCING SHALL BE PLACED IMMEDIATELY AFTER EXCAVATION.
15. PROVIDE CORNER BARS IN THE OUTSIDE FACE OF EXTERIOR GRADE BEAMS TO MATCH THE HORIZONTAL STEEL. AT ALL RE-ENTRANT CORNERS PLACE 2-#4 x 4'-0" IN THE SLAB.
16. UNDERGROUND UTILITIES OR OBSTRUCTIONS ENCOUNTERED SHALL BE REMOVED, RELOCATED OR LEFT IN PLACE AS DIRECTED BY ENGINEER.
17. BARS DETAILED AS CONTINUOUS SHALL BE LAPPED AS INDICATED BELOW.

STEEL REBAR #	TENSION LAP SPLICE LENGTH (IN)	HOOKED REBAR DEVELOPMENT LENGTH (IN)
3	14	6
4	18	8
5	22	10
6	27	12
7	48	14
8	55	16
9	62	18
10	69	20

18. ALL CONSTRUCTION SHALL CONFORM TO CURRENT CITY OF JURISDICTION BUILDING CODE, AND IRC 2018 WITH TEXAS REVISIONS.
19. THE GENERAL CONTRACTOR SHALL EXAMINE THE MECHANICAL DRAWINGS FOR REQUIRED MECHANICAL WORK TO BE PLACED IN CONCRETE. THE CONTRACTOR SHALL NOTIFY AND RECEIVE PERMISSION FROM THE STRUCTURAL ENGINEER FOR THE PLACING OF SLEEVES, PIPES OR OTHER MATERIALS.
20. ALL PIPES GOING THROUGH EXTERIOR GRADE BEAMS SHALL BE SLEEVED. ALL PIPES SHALL BE LOCATED AT MID DEPTH OF GRADE BEAM.
21. SIZE OF SLEEVES SHALL NOT EXCEED ⅓ OF OVERALL THICKNESS OF GRADE BEAM. SPACING OF SLEEVES SHALL NOT BE CLOSER THAN 3 DIAMETERS ON CENTER.
22. THE ENGINEER SHALL NOT BE LIABLE FOR ANY FOUNDATION REVISION OR CHANGES FROM THE ARCHITECTS, CONTRACTORS, OR OWNERS WITHOUT WRITTEN APPROVAL FROM THE ENGINEER.
23. CURE ALL CONCRETE IMMEDIATELY AFTER FINISHING WITH APPROVED CHEMICAL CURING COMPOUND.

NOTE:
FOOTING DESIGNED BASED ON PRESUMPTIVE LOAD OF 1,500 PSF AS PER IRC 2021 (TABLE R401.4.1)

CLASS OF MATERIAL	LOAD-BEARING PRESSURE (PSF)
CLAY, SANDY, SILTY CLAY, CLAYEY SILT, SILT AND SANDY SILTCLAY (CL, ML, MH AND CH)	1,500

* ENGINEER RECOMMENDS OBTAINING A GEOTECHNICAL REPORT TO DETERMINE SOIL CONDITION AND BEARING CAPACITY.

STRAIGHT SHAFT REINFORCEMENT SCHEDULE

SHAFT Ø	VERT. REINF.	TIES	TOTAL NUMBER OF PIER
12"	4-#5	#3 @10" O.C.	2 NOS.

FOR REVIEW ONLY - NOT FOR CONSTRUCTION

DaRam Engineers, Inc.
11000 RICHMOND AVE., SUITE 300
HOUSTON, TEXAS 77042
(713)528-1552 PH.
(713)583-5028 FAX
EMAIL:info@daramengineers.com
Copyright © Daram Engineers, Inc. All Rights Reserved
TEXAS FIRM REGISTRATION NUMBER F-9503

PROPOSED SCULPTURE/MONUMENT FOUNDATION AT

345 PINEY POINT RD, HOUSTON, TX 77024

ISSUED / REVISED

NO.	DATE	DESCRIPTION	
1	07/02/2025	FOR REVIEW	RKH
2			
3			

JOB NO:	25-338
CHECKED BY:	RKH
DRAWN BY:	RCS
DATE:	07/01/2025
SCALE:	AS SHOWN

DRAWING TITLE:
FOUNDATION PLAN

DRAWING NO.
S-1

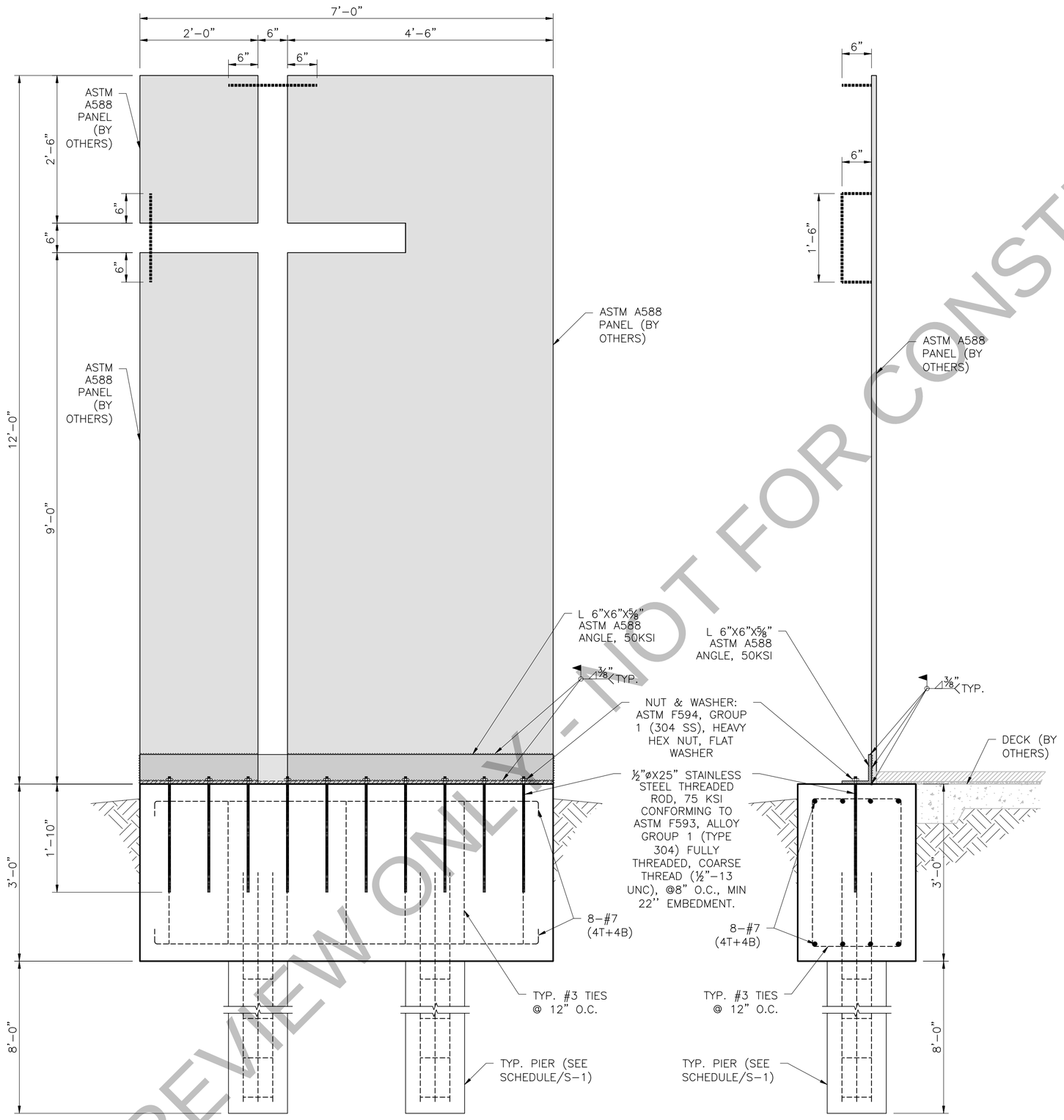

SECTION A-A

SCALE: ¾"=1'-0"

SECTION B-B

SCALE: ¾"=1'-0"

FOR REVIEW ONLY - NOT FOR CONSTRUCTION

DaRam Engineers, Inc.
11000 RICHMOND AVE., SUITE 300
HOUSTON, TEXAS 77042
(713)528-1552 PH.
(713)583-5028 FAX
EMAIL:info@daramengineers.com
Copyright © Daram Engineers, Inc.
All Rights Reserved
TEXAS FIRM REGISTRATION NUMBER F-9503

PROPOSED SCULPTURE/MONUMENT FOUNDATION AT

345 PINEY POINT RD, HOUSTON, TX 77024

ISSUED / REVISED

NO.	DATE	DESCRIPTION	
1	07/02/2025	FOR REVIEW	RKH
2			
3			

JOB NO:	25-338
CHECKED BY:	RKH
DRAWN BY:	RCS
DATE:	07/01/2025
SCALE:	AS SHOWN

DRAWING TITLE:
FOUNDATION DETAILS

DRAWING NO.
S-2